Flow Restrictor With Reverse Flow Check

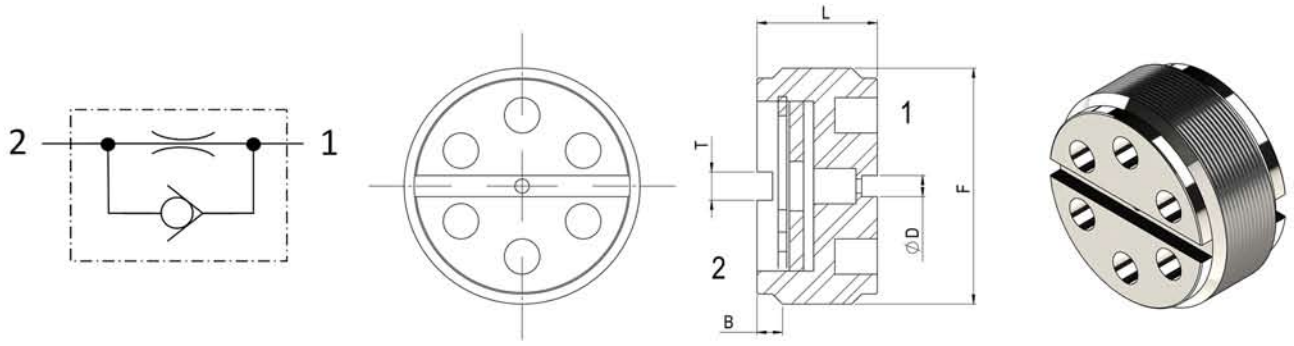

Part No	F	L	B	D	T	Flow Max
R932006081	G 1/4	7	1.1	0.065	2	15
R932500214	G 1/4	7	1.1	0.075	2	15
R932500215	G 1/4	7	1.1	0.100	2	15
R932500229	G 3/8	11	2	0.100	1.5	30

Banjo Bolt With Integrated Restrictor

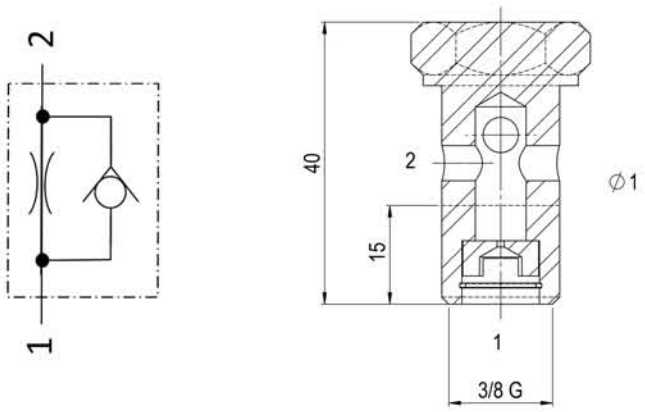

Part No: VICR38G1C1
Banjo bolt with integral reverse flow check restrictor with 1mm oriface 3/8 BSP.

Flow Regulator 3-Way Pressure Compensated

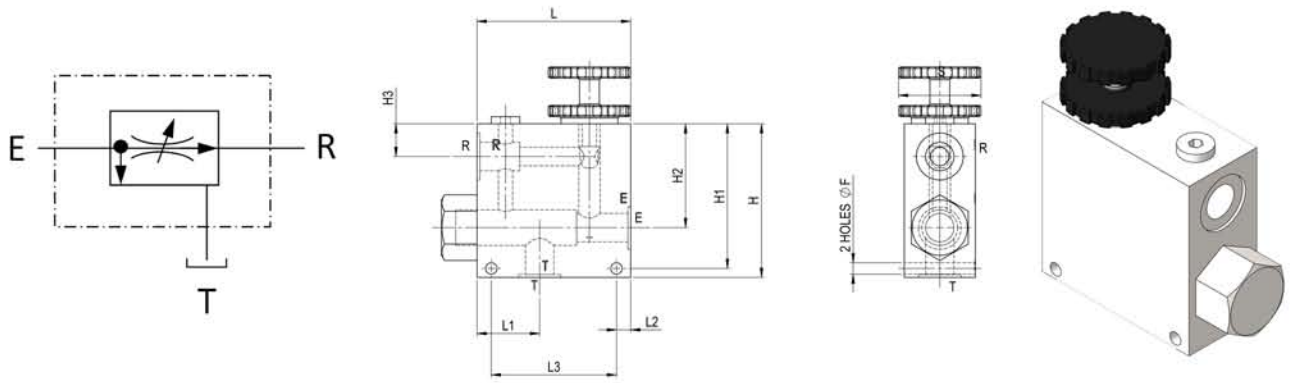

Part No	S	L3	L2	L1	L	H3	H2	H1	H	F	QR l/min	QE l/min	E/R/T	Weight Kg
R930004232	40	64	13	39	90	17.5	60	84	90	6.5	55	90	G 1/2	1.06
R930004233	50	88	10	44	108	23	73	101	108	8.5	90	150	G3/4	1.95